PMAC770/PMAC770-DR Multifunction Power Meter

Different Installation Method

➢ **PMAC770 : Panel Mount**

Front View

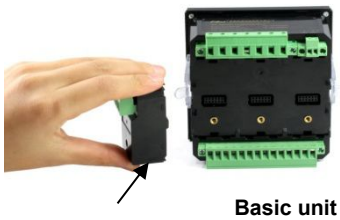

Back View

➢ **PMAC770-DR: 35mm DIN Rail Mount**

Front View

Back View

Feature

➢ **Suit for LV/ HV voltage system**

For low voltage system, direct connect up to 690 V (L-L) AC

For high voltage system, support connect up to 65kV

➢ **Ture-RMS measuring parameter**

True-RMS measuring parameters includes:

U, I, P, Q, S, PF, F, kWh, kvarh, kVAh

➢ **Demand calculation**

2 kinds of demand modes: fixed block and rolling block

➢ **Power quality analysis**

31st Harmonic analysis, K factor, unbalance etc.

➢ *** TOU (Multi-tariff billing), historical data of 31 days and 12 months**

TOU, 4 tariffs, 8 time period in 24 hours

➢ **Max./ Min. Record (U, I, P, Q*)**

➢ **Under/ over limit alarm**

➢ **64M bit Memory, Build-in Web**

Real-time data inquiry by Web

Save monitoring data (Time interval settable 1min, 5 min, 10min,15min, 30min)

Support FTP for download memory data

➢ **CO2 (carbon dioxide) calculation for kWh**

➢ **Multiple Communication**

BACnet MS/TP Protocol (RS485 port)

MODBUS-RTU Protocol (RS485 Port)

MODBUS-TCP/IP Protocol (Ethernet port)

➢ **DI / DO**

➢ **High accuracy**

Active energy: according to IEC62053-22, class 0.5s

Reactive energy: according to IEC62053-23, class 2

Basic Function

Real time metering	Voltage	Ua, Ub, Uc, Uab, Ubc, Uca, UL-L avg, UL-N avg
	Current	Ia, Ib, Ic, In, Iavg
	Power	Pa, Pb, Pc, ∑P, Qa, Qb, Qc, ∑Q, Sa, Sb,Sc, ∑S
	Power factor	PFa, PFb, PFc, ∑PF
	Energy	kWh, kvarh, kVAh *
	CO2 (Carbon dioxide)	
	Frequency	F
	Demand & Max. demand	Dmd_I, Dmd_P, Dmd_Q ,Dmd_S
	Max./ min. value	Max./ min. (U, I, P, Q*, S*)
	Multi-tariff energy *	
	Phase angle *	
Power quality analysis	Unbalance	U_unbl *, I_unbl *
	Harmonic (31st)	THDu, THDi, TOHDu, TOHDi, TEHDu, TEHDi, HRU *, RHI *
	Harmonic RMS (0-31st)	Harmonic RMS-U *, Harmonic RMS-I *, Harmonic RMS-P *
	Harmonic energy (1st -13th)	
	Voltage crest factor, current K factor, Load rate, Voltage deviation, Frequency deviation Running time record for power-on period and qualified voltage & current *	
Setpoint alarm	Over/ under limit alarm	
3DI +2 DO	3 status input + 2 relay output	
RS485	Modbus-RTU protocol	
Record function	SOE (event log), Real-time clock (yyyy-mm-dd hh:mm:ss) *	
	Voltage/ frequency deviation, Voltage unbalance record	

Optional Module (Only for PMAC770)

SW	4 status input (wet contact)	**LAN**	64M bit memory + Ethernet TCP/IP
SD	4 status input (dry contact)	**AI**	2 analog input (4-20mA)
C *	The 2nd RS485	**AO**	2 analog output (4-20mA)
Ep *	2 pulse output	**BA**	BACnet MS/TP protocol
R	2 relay output		

* means some of function can't be read through BACnet communication port

Parameter	Accuracy	Resolution	Measuring Range
Voltage	0.2%	0.01V	Direct: 690Vph-ph
			PT primary: 0.001kV~65kV (settable) PT secondary: 1~398V (settable)
Current	0.2%	0.001A	CT primary: 1~9,999A (settable) CT secondary: 1 A or 5A
Power	0.5%	0.1W/var/ VA	each phase: 0~649.9MW/ Mvar/ MVA
			Total: 0~1949.8MW/ Mvar/ MVA
Power factor	0.5%	0.001	-1.000~+1.000
Frequency	0.01	0.01Hz	45~ 65 Hz
Active energy	0.5%	0.1kWh	0~ 99,999,999.9 kWh
Reactive energy	2.0%	0.1kvarh	0~ 99,999,999.9 kvarh
Apparent energy	1.0%	0.1kVAh	0~ 99,999,999.9 kVAh
THD	1.0%	0.001	0~100.0%
Individual harmonic	1.0%	0.001	0~100.0%
Un-balance	1.0%	0.001	0~100.0%

Technical Specification

Connection mode	3-phase 3-wire, 3-phase 4-wire, 1-phase 2-wire
Metering	True RMS, 1 sec refresh time
Input	Rate current: 1A or 5A Rate voltage: Direct 120, 220V, 240V, 277V, 398Vph-N (optional) PT secondary: 1~398V (settable) Frequency: 50/ 60Hz
Overload	120% of rated, continuously Instantaneous current: 10 times/ sec Instantaneous voltage: 2 times/ sec
Status input	Wet contact, external power supply
Relay output	Node capacity: 250VAC/5A
Pulse output	Pulse constant: 1000~9999 programmable Pulse width: 60~100ms programmable Formula: 1 pulse = (1÷ pulse constant ×PT ×CT) kWh
Power supply	85 ~265VAC，85~265VDC (When select P1) 100~420VAC, 100~400VDC (When select P2)
Power loss	＜5VA
IP index	IP52 (front panel) and IP30 (case)
Power frequency withstand voltage	AC 2KV/minute
Insulation resistance	⩾50MΩ
Impulse withstand voltage	4kV (peak), 1.2/50*uS*

Communicati -on	Modbus-RTU Protocol	RS485 serial Baud rate: 2400, 4800, 9600, 19200, 38400bps Address: 1~247
	Modbus-TCP/ IP	Ethernet communication port Support connect 10M/100M ethernet, Modbus TCP/IP, Web, FTP
	BACnet MS/TP protocol	RS485 serial Baud rate: 2400, 4800, 9600, 19200, 38400, 57600, 76800bps Address: 1…127, excluding 99
Dimension (L x W x H)	**PMAC770:** Panel: 96 x 96 x 13.5 mm Cut-out: 90 x 90 x 58.6 mm (basic) 90 x 90 x 80.1 mm (optional module) **PMAC770-DR**: Panel: 96 x 96 x 12 mm Cut-out: 90 x 90 x 58.6 mm (basic)	
Weight	Basic unit: approx 550gr. Optional module: 50gr.	
Environment	Main Module & and other Modules	Operating temperature: -10℃~ +55 ℃ Storage temperature: -40℃~ +70 ℃ Humidity: 5%~95% non-condensing
	BACnet Module	Operating temperature: 0℃~ +50 ℃ Storage temperature: -5℃~ +75 ℃ Humidity: 10%~95% non-condensing

Standard (EMC)			
Electrostatic discharge immunity test	IEC 61000-4-2,Level 4	Surge immunity test (1, 2/50 μ s～8/20 μ s)	IEC 61000-4-5,Level 3
Radiated immunity test	IEC 61000-4-3,Level 3	Conducted emissions	EN 55022,Class B
Electrical fast transient/burst immunity test	IEC 61000-4-4,Level 4	Radiated emissions	EN 55022,Class B

Dimension & Installation

Unit: mm

PMAC770 : Panel Mount

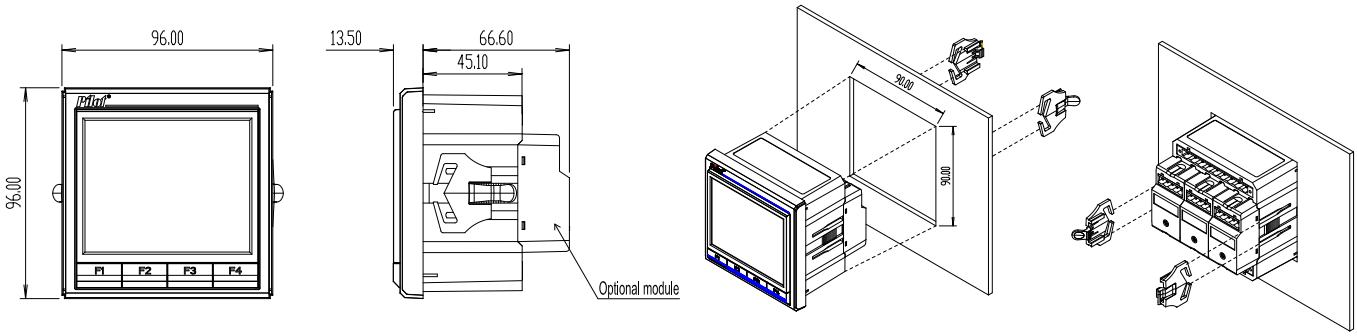

PMAC770-DR : DIN Rail Mount

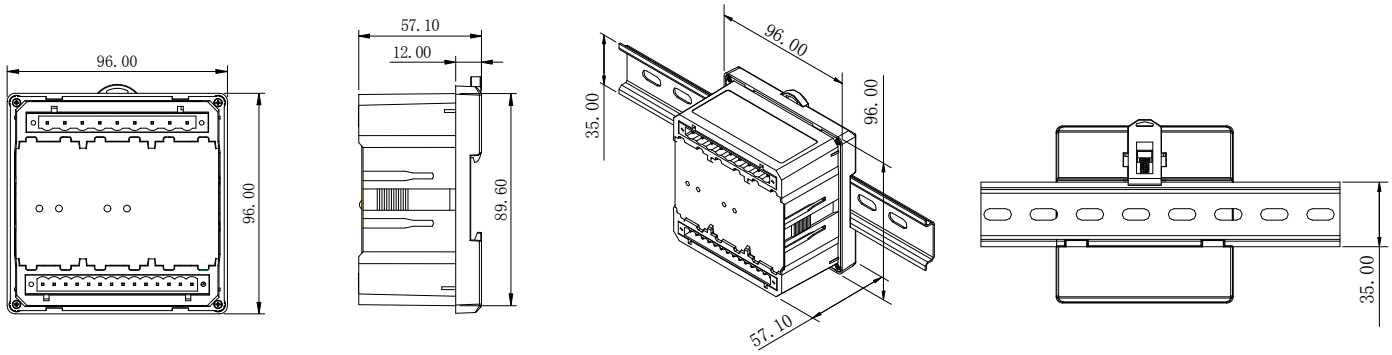

Order Information

PMAC770-E-- ①--② --③--④

Optional Module	SW	DI Module: 4 Status Input (wet contact)
	SD	DI Module: 4 Status Input (Wet contact)
	R	DO Module: 2 Relay Ouput
	C	RS485 Module: The 2nd RS485 comm
	LAN	64M bits memory + Ethernet TCP/IP
	AO	AO Module: 2 Analog output (4~20mA)
	AI	AI Module: 2 Analog input (4~20mA)
	Ep	PO Module: 2 Pulse Output
	BA	BACnet Module: BACnet protocol
Rated input volt/ amp	V1	57.7/ 100V (via PT), 5A
	V2	57.7/ 100V (via PT), 1A
	V3	220/ 380V (direct), 5A
	V4	220/ 380V (direct), 1A
	V5	120/ 208V (direct), 5A
	V6	240/ 415V (direct), 5A
	V7	277/ 480V (direct), 5A
	V8	63.5/ 110V (via PT), 5A
	V9	120/ 208V (direct), 1A
	V10	240/ 415V (direct), 1A
	V11	277/ 480V (direct), 1A
	V12	63.5/ 110V (via PT), 1A
	V13	398/690V (direct), 5A
Rated frequency	F1	50Hz
	F2	60Hz
Power supply	P1	85~265Vac, or 85 ~ 265Vdc, 45-65Hz
	P2	100 ~ 420Vac , or 100 ~ 400Vdc, 45~60Hz

Note: 1. PMAC770 supports Max. 3 optional module
2. PMAC770 supports Max. 2 **S** optional module, others optional function can only by chosen once.
3. **AI** & **AO** module can only be selected once
4. **64M** bit memory data can only be read by MODBUS TCP/IP
5. **BA** & **LAN** module can not be selected together

PMAC770-DR--E--①--② -- ③

Rated input volt/ amp	V1	57.7/ 100V (via PT), 5A
	V2	57.7/ 100V (via PT), 1A
	V3	220/ 380V (direct), 5A
	V4	220/ 380V (direct), 1A
	V5	120/ 208V (direct), 5A
	V6	240/ 415V (direct), 5A
	V7	277/ 480V (direct), 5A
	V8	63.5/ 110V (via PT), 5A
	V9	120/ 208V (direct), 1A
	V10	240/ 415V (direct), 1A
	V11	277/ 480V (direct), 1A
	V12	63.5/ 110V (via PT), 1A
	V13	398/690V (direct), 5A
Rated frequency	F1	50Hz
	F2	60Hz
Power supply	P1	85~265Vac, or 85 ~ 265Vdc, 45-65Hz
	P2	100 ~ 420Vac , or 100 ~ 400Vdc, 45~60Hz